IMPACT OF SOCIAL MEDIA MARKETING FEATURES ON CONSUMER'S PURCHASE DECISION IN RICHEESE FACTORY: BRAND TRUST AS A MEDIATOR

Sevy Amalia Putri[1]
Universitas Swadaya Gunung Jati, Cirebon, Indonesia
sevy.122020266@ugj.ac.id

Adi Setiawan[2]
Universitas Swadaya Gunung Jati, Cirebon, Indonesia
a.setiawan28@gmail.com

Abstract

The development of social media has driven significant changes in marketing strategies and consumer behavior, particularly in the fast food industry, which is highly competitive and visually oriented. This study aims to analyze the influence of social media marketing features, including informativeness, interactivity, perceived relevance, and entertainment, on consumer purchasing decisions, with brand trust as a mediating variable at Richeese Factory in Cirebon City. This study uses a quantitative approach with a survey method, where data was collected through the distribution of a Likert scale questionnaire to 80 respondents using accidental sampling techniques. Data analysis was performed using Structural Equation Modeling (SEM) with the help of AMOS software to test the causal relationship between variables and the mediating role of brand trust. The results showed that perceived relevance and entertainment had a positive and significant effect on brand trust, while brand trust was found to have a strong influence on consumer purchasing decisions. These findings confirm that brand trust plays an important role in bridging the influence of social media marketing features on purchasing decisions. This study is expected to contribute theoretically to the development of the Unified Theory of Acceptance and Use of Technology (UTAUT) and serve as a practical reference for fast food companies in designing more effective social media marketing strategies oriented towards building consumer trust.

Keywords: Social Media Marketing Features, Brand Trust, Purchase Decision, SEM-AMOS, Richeese Factory

INTRODUCTION

Recent years have seen a growing interest in the effectiveness of social media marketing due to increased use of digital devices and an increasingly competitive fast food industry. The emergence of platforms such as Instagram, TikTok, and Facebook has changed the way businesses and customers interact through visual content, user reviews, and interactive features that have become important sources of information during the purchasing process. We Are Social & Hootsuite (2024) states that the average Indonesian spends 3 hours and 4 minutes a day on social media, with 75.5% of users purchasing something based on digital content recommendations. This phenomenon proves that social media functions as a smart marketing channel that utilizes digital attributes to influence consumer purchasing decisions (Hanaysha, 2022).

Companies need to create content that is useful, engaging, personally relevant, and enjoyable to read due to the intense competition between Richeese Factory, KFC, McDonald's, Burger King, and HokBen. Digital campaigns often fail because they do not sufficiently consider psychological variables such as trust (Ohara et al., 2025). Companies that thoroughly understand how social media marketing features influence purchasing decisions through brand trust can develop different methods for teenagers, young adults, and urban families.

An international study by Alalwan (2018) shows that social media marketing features such as informativeness, interactivity, relevance, and entertainment have a significant impact on purchase decisions. Other studies by Al-Shareef et al. (2016) and Hanaysha (2022) emphasize that these features can strengthen brand trust, which in turn increases purchase intent. Geographical context, consumption culture, and culinary trends in each country can result in different consumer behaviors, so research on the relationship between social media marketing features, brand trust, and purchase decisions at Richeese Factory in Indonesia is still relatively limited (Suwanto et al., 2021).

Most previous studies have discussed this topic, but the majority still focus on purchase intention and have not touched on actual purchase decisions. Many studies only evaluate one or two aspects of social media marketing, thus failing to describe the effectiveness of digital strategies in a comprehensive and multidimensional manner (Alalwan, 2018). Indonesian literature is also limited, especially in placing brand trust as a mediating variable that can explain the psychological process of how and why digital features influence consumer behavior (Wijaya & Hartono, 2021).

This study aims to explain the impact of four social media marketing attributes on purchasing decisions, evaluate the function of brand trust as a mediating variable, and validate the research model in the context of Richeese Factory in Cirebon City. This research addresses the problem formulation regarding the influence of informativeness, interactivity, perceived relevance, and entertainment on brand trust and actual purchasing decisions. Through a systematic quantitative methodology, this study analyzes the extent to which the digital marketing strategies implemented influence consumer behavior and the role of brand trust as a mediator between marketing features and purchasing decisions.

This study enriches the scientific domain by expanding the use of the Theory of Acceptance and Use of Technology (UTAUT) through the addition of brand trust as a mediator (Venkatesh et al., 2022). The novelty of this study lies in testing the four key

features of social media marketing simultaneously on actual purchase decisions, rather than just purchase intentions. This study positions brand trust as a mediator variable to explain consumer thought processes and focuses on Richeese Factory in Cirebon City, which has a visual market character and impulsive purchasing behavior. The analysis of the relationship between variables was conducted using SEM-AMOS, resulting in a more comprehensive model mapping for the fast-food restaurant sector.

The theoretical benefits of this research are expected to contribute to the development of literature on consumer decision-making in the dynamic realm of social media. The practical results of this research can serve as guidelines for fast food company management and digital marketing teams in improving the effectiveness of campaigns and sales conversions through more targeted content strategies. The findings of this study can also be used as a basis for institutional decision-making in formulating guidelines, policies, or strategies related to digital branding, online promotion, and strengthening brand trust in the eyes of consumers

REVIEW OF LITERATURE

Unified Theory of Acceptance and Use of Technology (UTAUT)

In the development of studies on customer service and interpersonal communication, various studies have explored the complexity of the relationship between service quality and customer satisfaction in the context of the telecommunications industry. Rapid digital transformation has changed the paradigm of interaction between service providers and consumers, creating the need for a deeper understanding of the role of responsive empathy and interpersonal communication in shaping the customer experience.

The concept of responsive empathy, as proposed by (Hamid et al., 2020), is a synthesis of two fundamental elements in customer service: responsiveness and empathy. In their study of 500 telecom service customers, it was found that the integration of these two elements significantly increased customer satisfaction rates by up to 67% compared to conventional approaches. Responsive empathy includes not only speed and precision in responding to customer needs, but also the ability to understand and feel the customer's emotional state in depth.

(Aruningtyas, 2024) In a longitudinal study they identified that the effectiveness of responsive empathy is highly dependent on the context and demographic characteristics of the customer. The study, which involved 1,200 respondents, revealed that customers from different age groups have different expectations for the form of empathy shown by customer service. The younger generation tends to appreciate quick responses through digital platforms, while the older age group values more in-depth personal interactions.

The aspect of interpersonal communication in customer service has undergone a significant evolution along with the development of digital technology. According to (Khutami et al., 2024), the integration of Artificial Intelligence in customer service systems has created new challenges in maintaining the element of human touch in customer interactions. Their study of the implementation of customer service chatbots in five major telcos shows that while technology can improve efficiency, the ability to demonstrate genuine empathy remains a crucial factor in creating a positive customer experience.

The dimension of service quality in the context of modern telecommunications cannot be separated from the aspect of multichannel communication. Research conducted by (Laloan, 2024) revealed that the success of interpersonal communication is highly dependent on the company's ability to integrate various communication channels seamlessly. Their analysis of data from 3,000 customer service interactions showed that consistency in demonstrating empathy and responsiveness across different channels increased customer satisfaction rates by 45%.

Emphasizing the importance of personalization in interpersonal communication between customer service and customers. Through a mixed-method approach involving quantitative surveys and in-depth interviews, their research identified that the ability to tailor communication styles to customers' individual preferences had a significant impact on satisfaction levels. This personalization includes not only the selection of communication channels, but also the adaptation of communication tones and styles according to customer characteristics.

Aspects of emotional intelligence in the context of customer service are the focus of research (Sudiana et al., 2023). Their study of 150 customer service agents revealed a strong correlation between agents' levels of emotional intelligence and their ability to demonstrate effective responsive empathy. Systematic emotional intelligence training has been proven to increase the capacity of agents to handle complex situations and create satisfactory resolutions for customers.

In the context of digital transformation, (Ardan et al., 2024) explore how technology can be leveraged to improve the quality of interpersonal communication in customer service. Their research shows that the implementation of a sophisticated CRM system, supported by comprehensive customer data analysis, can help customer service agents provide more personalized and empathetic responses. However, they also warn that over-reliance on technology can reduce the humanistic aspect of interactions with customers.

Cultural factors and local context in the implementation of responsive empathy are the focus of the research (Fauzan et al., 2024). Their comparative study of customer service practices in various regions of Indonesia revealed that the effectiveness of interpersonal communication is greatly influenced by local cultural nuances. Understanding this cultural context is crucial in developing effective and culturally sensitive communication strategies.

The measurement and evaluation aspects of responsive empathy are discussed in depth by (Fadillah & Listiawan, 2024). They developed a comprehensive framework to measure the effectiveness of interpersonal communication in the context of customer service, which includes various dimensions such as response time, resolution rate, and customer satisfaction index. This framework has been validated through implementation in several telecommunications companies and has proven effective in identifying areas that need improvement.

Recent research by (Fadhilah, 2024) Exploring the interconnection between responsive empathy, customer satisfaction, and customer loyalty in the context of the telecommunications industry. Their two-year longitudinal study revealed that the implementation of a consistent responsive empathy strategy not only improves customer satisfaction in the short term, but also contributes significantly to the formation of long-term customer loyalty.

The synthesis of these studies shows that responsive empathy and interpersonal communication are fundamental elements in creating a positive customer experience in the telecommunications sector. The successful implementation of these two aspects depends on the company's ability to integrate modern technology with a personal touch, understand the local cultural context, and develop the emotional intelligence capacity of customer service agents. The development of a comprehensive measurement framework is also crucial in ensuring the effectiveness of the communication strategy implemented.

These findings provide a strong theoretical foundation for further research on how responsive empathy and interpersonal communication can be optimized in the context of customer service in the telecommunications industry. The focus on personalization, technology integration, and understanding of cultural context is becoming increasingly relevant as customer expectations evolve and the industry continues to undergo digital transformation

The Unified Theory of Acceptance and Use of Technology (UTAUT), developed by Venkatesh et al. (2003), is a comprehensive paradigm that explains what drives people to accept and use technology. This model integrates eight previously established theories, including TAM, TPB, IDT, and Social Cognitive Theory. The model focuses on four main constructs, namely performance expectancy, effort expectancy, social influence, and facilitating conditions, which together explain how perceptions of usefulness, ease of use, social influence, and technical support determine an individual's decision to adopt technology. In the digital era, UTAUT theory has emerged as an important framework for examining consumer behavior related to informative, interactive, entertaining, and personally relevant aspects of social media (Soni & Sharma, 2021; Kaur et al., 2022).

The application of this theory in the fast food industry indicates that easy access to information, rapid interaction, and clear digital marketing messages all contribute to enhancing consumers' performance expectancy and effort expectancy, which ultimately strengthens brand trust and drives purchase decisions (Al-Emran et al., 2020). Furthermore, social interactions through customer reviews and user-generated content increase social influence on purchasing preferences, while supporting factors such as ease of navigation and digital platform assistance enhance the overall user experience. Oliveira et al. (2016) also demonstrated that brand trust acts as a mediating variable between technological features and purchase decisions, as when consumers perceive a brand to be credible and trustworthy, risk perception decreases, and purchase intention increases. Therefore, UTAUT theory serves as an appropriate theoretical foundation for this research in explaining the relationship between social media marketing features, brand trust, and consumer purchase decisions, as it is capable of depicting the logical connection between digital stimuli, psychological responses, and consumptive behavior within the modern marketing ecosystem.

The Effect of Interactivity on Brand Trust

Interactivity in social media refers to the ability of digital platforms to facilitate two-way communication between companies and consumers in real-time (Jensen, 1998; Kiousis, 2002). When consumers can interact directly with a brand through comment sections, direct messages, or question-and-answer features, they feel noticed and valued, thereby forming a stronger emotional bond. This emotional bond serves as the primary foundation for the formation of brand trust. Zafar et al. (2021) and De Vries et al. (2012) state that intense interaction between consumers and brands on social media can foster a sense of trust and

increase consumers' tendency to make purchases. Furthermore, the research of Sohail et al. (2020) empirically proves that social media interactivity has a positive and significant effect on brand trust. Arjun et al. (2021) also assert that active consumer participation in brand-related discussions on social media creates a closer relationship that further strengthens consumer trust.

The Effect of Entertainment on Brand Trust

Entertainment in social media marketing refers to the ability of digital content to create enjoyable, entertaining, and memorable experiences for consumers (Sharma et al., 2022; Cheung, 2020). Content that is entertaining not only attracts consumers' attention, but also builds positive associations with the brand that subsequently contribute to the formation of trust. When consumers enjoy the content shared by a brand, a positive perception of that brand will naturally be formed. Mustafi and Hosain (2020) found that entertaining content is able to form positive consumer attitudes toward a brand, while Smink et al. (2019) asserts that attractive and entertaining marketing activities increase consumers' interest in seeking more information about a brand before deciding to make a purchase. Moreover, Sohail et al. (2020) and Hafez (2021) empirically confirmed that entertainment has a positive effect on brand trust, and that trust subsequently acts as a bridge between digital entertainment experiences and consumer purchasing behavior (Wottrich et al., 2017).

The Effect of Perceived Relevance on Brand Trust

Perceived relevance reflects the extent to which consumers consider that the marketing content displayed through social media has a personal connection to their needs, preferences, and personal goals (Zhu & Chang, 2016). When marketing messages are designed personally and specifically for certain consumer segments, consumers tend to feel that the brand genuinely understands and cares about their needs. This condition directly contributes to an increase in consumer trust towards the brand. Gautam and Sharma (2017) found that quick and personalized company responses to consumer inquiries through social media contribute to the strengthening of brand trust. Consistent with this, Kim and Ko (2012) and Sohail et al. (2020) demonstrated that marketing content tailored to individual preferences and needs has been proven to increase consumer trust in a brand. Hafez (2021) further reinforces this finding by stating that brand trust is positively influenced by social media marketing activities that are personally relevant. Based on the above explanation, the following hypothesis is formulated:

The Effect of Informativeness on Brand Trust

Informativeness is one of the key features of social media marketing that plays an important role in shaping consumer perceptions of a brand. In the digital context, the delivery of accurate, relevant, and easily understandable information through social media platforms can increase consumer confidence in the quality and credibility of a brand (Rotzoll & Haefner, 1990; Lee & Hong, 2016). Consumers who receive adequate information about products, services, or brand values tend to have more positive perceptions, which ultimately strengthens their trust in the brand. Hajli (2014) and Warren et al. (2014) affirm that the delivery of relevant information about product quality through social media significantly contributes to the enhancement of brand trust. Furthermore, Blanco et al. (2010) found that the informativeness of social media has a positive effect on consumer behavior, including in terms of trust that forms the basis of purchase decisions. Based on the above explanation, the following hypothesis is formulated:

The Effect of Brand Trust on Purchase Decision

Brand trust is a psychological construct that plays a central role in the consumer purchase decision-making process. Brand trust is defined as consumers' belief in the integrity, competence, and consistency of a brand in fulfilling its promises and delivering value that aligns with consumer expectations (Pamungkas et al., 2024). In an increasingly competitive digital environment, consumer trust in a brand becomes a decisive factor that distinguishes which brand is chosen and which is overlooked amidst the abundance of product choices and information on social media platforms.

When consumers judge that a brand is reliable, safe, and of high quality, their perception of the potential risk of purchasing will decrease significantly. This condition creates a sense of psychological security that ultimately encourages consumers to realize their purchase decisions (Ningrum et al., 2025). From the UTAUT perspective, brand trust acts as a psychological construct that bridges the relationship between the digital stimuli received by consumers and the actual purchasing behavior that is manifested. This suggests that the stronger a consumer's trust in a brand, the greater the likelihood of them making an actual transaction.

Consumer purchase decisions in the digital environment are not only based on personal experience, but are also influenced by the level of trust formed through interactions with brand content on social media, reviews from other consumers, and the transparency of information presented by the company (Kotler & Keller, 2021). Keegan et al. (2023) found that exposure to interactive and informative social media content enhances consumers' cognitive evaluation, which ultimately drives actual purchasing behavior. Furthermore, an increased level of trust in a brand has been proven to reduce consumers' perceived risk, thereby increasing the likelihood of a purchase decision occurring.

Haque and Ahmad (2021) found that brand trust directly influences purchase decisions, whereby informative, interactive, and relevant social media features build trust that subsequently drives actual transactions. Consistent with this, Kim and Song (2022) assert that brand trust strengthens the influence of digital features on purchase decisions, particularly in the context of consumer behavior that is highly responsive to visual and interactive content. Thus, brand trust does not merely function as a mediating variable, but also has a direct and significant influence on consumer purchase decisions. Based on the above explanation, the following hypothesis is formulated:

RESEARCH METHOD

This study employs a quantitative research design with a causal approach to examine the cause-and-effect relationships among the variables under investigation. The research is explanatory in nature and aims to analyze the influence of Social Media Marketing Features on Purchase Decision through Brand Trust as a mediating variable. Causal research is appropriate for testing relationships among variables and examining the effects of one variable on another (Hair et al., 2019). Furthermore, this study adopts the Unified Theory of Acceptance and Use of Technology (UTAUT) framework to explain how social media marketing features influence consumer purchase decisions through cognitive, psychological, and behavioral mechanisms (Venkatesh et al., 2003).

Data were collected through a structured questionnaire distributed online using Google Forms to consumers of Richeese Factory in Cirebon. The online survey method was selected because it allows researchers to reach respondents efficiently while reducing time and operational costs (Wright, 2017). The questionnaire employed a 5-point Likert scale ranging from 1 (Strongly Disagree) to 5 (Strongly Agree) to measure respondents' perceptions across all constructs.

The measurement items were adapted from established scales in previous studies to ensure content validity and contextual relevance. Social Media Marketing Features were measured through four dimensions: informativeness, interactivity, perceived relevance, and entertainment, adapted from Hanaysha (2022) and Sohail et al. (2020). Brand Trust, as the mediating variable, was measured using indicators adapted from Pamungkas et al. (2024) and Ningrum et al. (2025). Purchase Decision, as the dependent variable, was measured using indicators adapted from Kotler and Keller (2021) and Keegan et al. (2023).

The study employed accidental sampling (convenience sampling) because the exact population size of Richeese Factory consumers in Cirebon was unknown. This sampling technique enables researchers to collect data from respondents who are readily available and willing to participate in the study (Sekaran & Bougie, 2016). The minimum sample size was determined using Roscoe's rule, which recommends a sample size of at least ten times the number of variables analyzed (Sekaran & Bougie, 2016). With seven variables included in this study, the minimum required sample size was calculated as follows:

n = Number of Variables × 10

n = 7 × 10

n = 70 Respondents

Therefore, a minimum of 70 respondents was required for this study.

Data analysis was conducted using Path Analysis with the assistance of LISREL software. Path analysis is appropriate for examining direct and indirect effects among variables within a causal model, particularly when mediating variables are involved (Kusnendi, 2006). Hypothesis testing was performed using the Critical Ratio (CR), which is equivalent to the t-test, at a significance level of 1%. Model fit was evaluated using several goodness-of-fit indices, including P-value, RMSEA, GFI, AGFI, NFI, TLI, and CFI. A model is considered acceptable when the P-value exceeds 0.05, RMSEA is below 0.08, and the fit indices are greater than 0.90 (Hair et al., 2019).

Research Hypothesis

This study aims to analyze the influence of Social Media Marketing Features on Purchase Decision through Brand Trust among Richeese Factory consumers in Cirebon. Based on the theoretical framework and previous empirical studies, the following hypotheses are proposed:

H1: Interactivity has a positive and significant effect on Brand Trust.

H2: Entertainment has a positive and significant effect on Brand Trust.

H3: Perceived Relevance has a positive and significant effect on Brand Trust.

H4: Informativeness has a positive and significant effect on Brand Trust.

H5: Brand Trust has a positive and significant effect on Purchase Decision.

Research Model

This research model describes the relationship between independent variables (Interactivity, Entertainment, Perceived Relevance, and Informativeness) and the mediating

variable (Brand Trust), as well as the dependent variable (Purchase Decision). The model illustrates that social media marketing features influence Brand Trust, which in turn affects Purchase Decision. This relationship can be illustrated as follows:

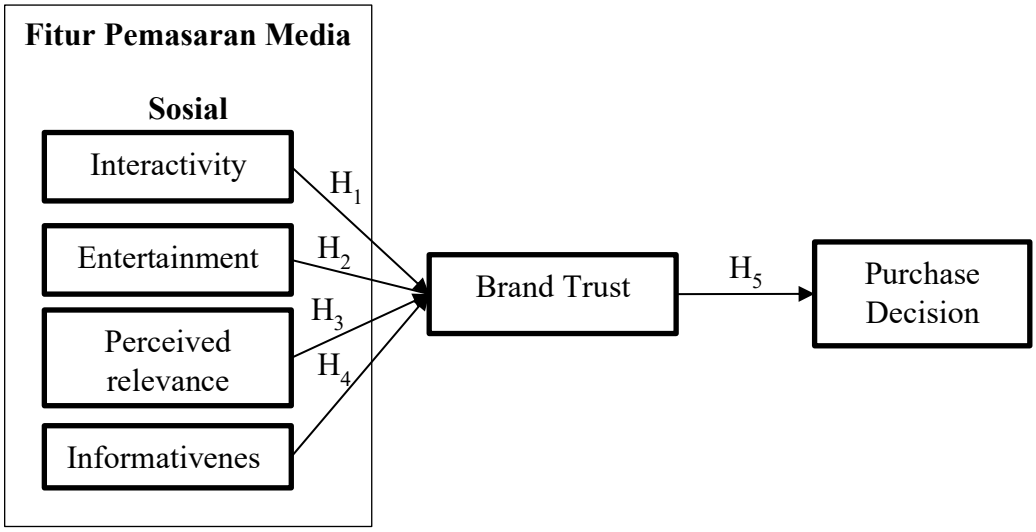

Figure 1.
Research Conceptual Framework

The image of the model of this study shows that the independent variables, namely Interactivity, Entertainment, Perceived Relevance, and Informativeness, have a direct relationship with Brand Trust as a mediating variable, which in turn influences Purchase Decision as the dependent variable. This relationship will be tested through Path Analysis using LISREL software to examine both direct and indirect effects among variables.

This study uses a quantitative approach with a survey method, where data is collected through a structured questionnaire using a 5-point Likert scale. The data analysis technique used is Path Analysis to test the effect of each social media marketing feature on Brand Trust, as well as the effect of Brand Trust on Purchase Decision.

The results of this study are expected to provide deeper insights for Richeese Factory in understanding consumer behavior in the digital marketing context, particularly in improving social media marketing strategies by focusing on interactivity, entertainment, perceived relevance, and informativeness to strengthen brand trust and ultimately increase purchase decisions.

Based on the data collected from 80 respondents, the majority were aged 21-25 years (56 respondents, 70%). Among these, 55 had visited Richeese Factory, while only 1 had not. Respondents aged 17-20 years (14 respondents, 17.5%) and aged 26-30 years (10 respondents, 12.5%) had all visited Richeese Factory. Overall, 79 out of 80 respondents (98.75%) had direct experience visiting the outlet, thereby strengthening the validity of their responses regarding the Purchase Decision (Y) and Brand Trust (Z) variables.

Vol. 9. No. 2 (2026)
Page: 18323-18340

RESULTS AND DISCUSSION

Respondent Characteristics

Based on the data collected from 80 respondents, the majority were aged 21-25 years (56 respondents, 70%). Among these, 55 had visited Richeese Factory, while only 1 had not. Respondents aged 17-20 years (14 respondents, 17.5%) and aged 26-30 years (10 respondents, 12.5%) had all visited Richeese Factory. Overall, 79 out of 80 respondents (98.75%) had direct experience visiting the outlet, thereby strengthening the validity of their responses regarding the Purchase Decision (Y) and Brand Trust (Z) variables.

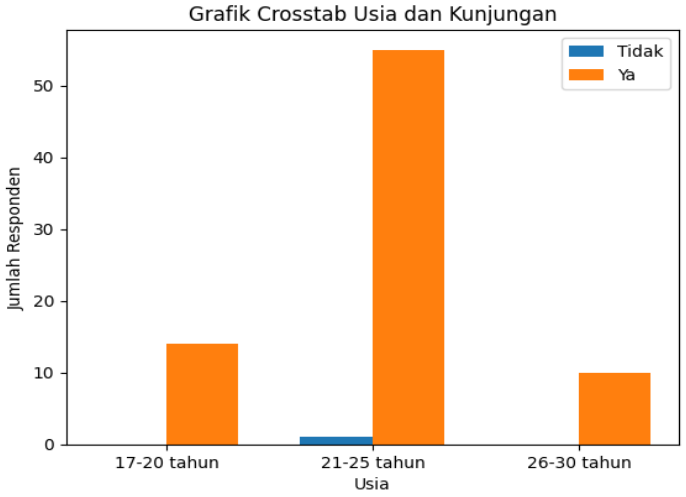

Figure 1.
Cross-tabulation of Age and Richeese Factory Visit

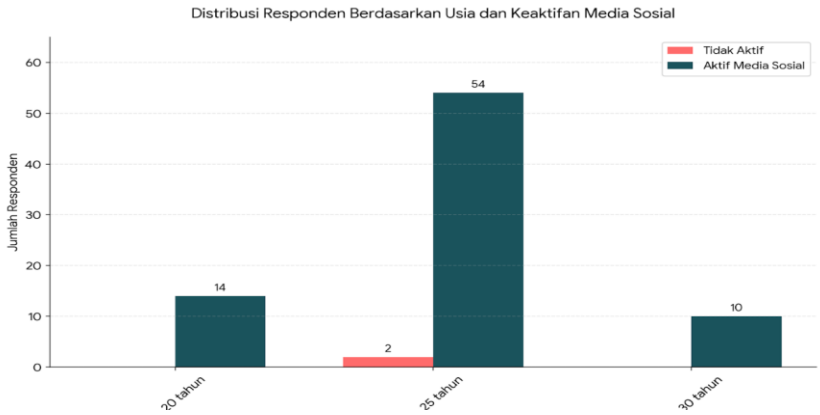

Figure 2.
Cross-tabulation of Age and Social Media Activity

Table 1.
Validity Test Results

Variable	Indicator	r-Count	r-Table (df=78)	Remarks
Informativeness (X1)	X1.1	0.953	0.2199	Valid
	X1.2	0.892	0.2199	Valid

	X1.3	0.883	0.2199	Valid
	X1.4	0.943	0.2199	Valid
Interactivity (X2)	X2.1	0.953	0.2199	Valid
	X2.2	0.913	0.2199	Valid
	X2.3	0.886	0.2199	Valid
	X2.4	0.936	0.2199	Valid
Perceived Relevance (X3)	X3.1	0.951	0.2199	Valid
	X3.2	0.854	0.2199	Valid
	X3.3	0.857	0.2199	Valid
	X3.4	0.863	0.2199	Valid
	X3.5	0.818	0.2199	Valid
	X3.6	0.916	0.2199	Valid
Entertainment (X4)	X4.1	0.860	0.2199	Valid
	X4.2	0.822	0.2199	Valid
	X4.3	0.855	0.2199	Valid
	X4.4	0.842	0.2199	Valid
	X4.5	0.829	0.2199	Valid
Brand Trust (Z)	Z.1	0.884	0.2199	Valid
	Z.2	0.915	0.2199	Valid
	Z.3	0.890	0.2199	Valid
	Z.4	0.860	0.2199	Valid
Purchase Decision (Y)	Y.1	0.862	0.2199	Valid
	Y.2	0.821	0.2199	Valid
	Y.3	0.910	0.2199	Valid
	Y.4	0.863	0.2199	Valid
	Y.5	**0.879**	**0.2199**	**Valid**

Based on Table 1, all items across all variables had r-count values greater than the r-table value of 0.2199. Therefore, all measurement items are declared valid and suitable for use in the subsequent analysis.

Table 2.
Reliability Test Results

Variable	Cronbach's Alpha	Standard	Remarks
Informativeness (X1)	0.937	> 0.70	Reliable
Interactivity (X2)	0.940	> 0.70	Reliable
Perceived Relevance (X3)	0.940	> 0.70	Reliable
Entertainment (X4)	0.897	> 0.70	Reliable
Brand Trust (Z)	0.909	> 0.70	Reliable
Purchase Decision (Y)	0.922	> 0.70	Reliable

All six variables achieved Cronbach's Alpha values well above the 0.70 threshold, ranging from 0.897 (Entertainment) to 0.940 (Interactivity and Perceived Relevance). These results confirm that all measurement instruments are reliable.

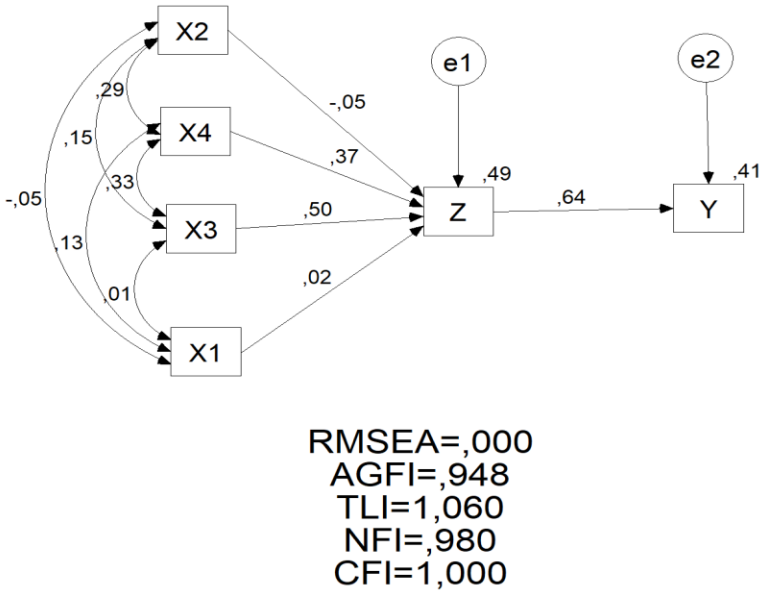

Figure 3.
Path Analysis Full Model

Table 3.
Regression Weights - Full Model (Before Trimming)

Path	Estimate	S.E.	C.R.	P	Remarks
Z <--- Perceived Relevance (X3)	0.345	0.058	5.915	***	Very Significant
Z <--- Entertainment (X4)	0.332	0.081	4.112	***	Very Significant
Z <--- Interactivity (X2)	-0.050	0.079	-0.639	0.523	Not Significant
Z <--- Informativeness (X1)	0.016	0.080	0.197	0.844	Not Significant
Y <--- Brand Trust (Z)	0.641	0.087	7.357	***	Very Significant

Table 4.
Goodness of Fit Results - Full Model (Before Trimming)

Fit Index	Cut-off Value	Estimate	Remarks
P-Value	≥ 0.05	0.666	Good Fit
Chi-Square	Small (expected)	2.384	Good Fit
CMIN/DF	≤ 2.00 / ≤ 3.00	0.596	Good Fit
RMSEA	≤ 0.08	0.000	Good Fit

GFI	≥ 0.90	0.990	Good Fit
AGFI	≥ 0.90	0.948	Good Fit
TLI	≥ 0.95	1.060	Good Fit
CFI	≥ 0.95	1.000	Good Fit
NFI	≥ 0.90	0.980	Good Fit

The full model demonstrated excellent fit (CFI = 1.000, NFI = 0.980, GFI = 0.990, RMSEA = 0.000). However, two paths were found to be non-significant: Interactivity (X2) to Brand Trust (Z) with P = 0.523, and Informativeness (X1) to Brand Trust (Z) with P = 0.844. Based on these findings, the Trimming Theory technique was applied to remove the non-significant paths and re-estimate the model.

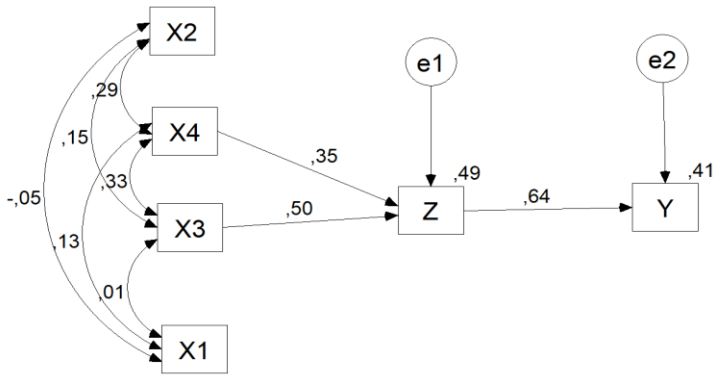

Figure 4.
Path Analysis Trimmed Model (Final Model)

Table 5.
Regression Weights - Trimmed Model (Final Model)

Path	Estimate	S.E.	C.R.	P	Remarks
Z <--- Perceived Relevance (X3)	0.342	0.058	5.865	***	Very Significant
Z <--- Entertainment (X4)	0.321	0.077	4.152	***	Very Significant
Y <--- Brand Trust (Z)	0.641	0.087	7.357	***	Very Significant

Table 6.
Goodness of Fit Results - Trimmed Model (Final Model)

Fit Index	Cut-off Value	Estimate	Remarks
P-Value	≥ 0.05	0.826	Good Fit
Chi-Square	Small (expected)	2.858	Good Fit
CMIN/DF	≤ 2.00 / ≤ 3.00	0.476	Good Fit
RMSEA	≤ 0.08	0.000	Good Fit
GFI	≥ 0.90	0.988	Good Fit
AGFI	≥ 0.90	0.959	Good Fit
TLI	≥ 0.90	1.077	Good Fit
CFI	≥ 0.90	1.000	Good Fit
NFI	≥ 0.90	0.975	Good Fit

After trimming, the final model retained three significant paths. The goodness-of-fit indices further improved, with P-value rising from 0.666 to 0.826, confirming an excellent model fit. All fit indices (CFI = 1.000, NFI = 0.975, GFI = 0.988, AGFI = 0.959, TLI = 1.077, RMSEA = 0.000, CMIN/DF = 0.476) surpass their respective thresholds.

Table 7.
Decomposition of Effects Among Variables

Path	Direct Effect	Indirect Effect	Total Effect
Informativeness (X1) → Y	0.000	0.010	0.010
Informativeness (X1) → Z	0.016	0.000	0.016
Interactivity (X2) → Y	0.000	-0.034	-0.034
Interactivity (X2) → Z	-0.054	0.000	-0.054
Perceived Relevance (X3) → Y	0.000	0.321	0.321
Perceived Relevance (X3) → Z	0.503	0.000	0.503
Entertainment (X4) → Y	0.000	0.233	0.233
Entertainment (X4) → Z	0.366	0.000	0.366
Brand Trust (Z) → Y	0.638	0.000	0.638

Effect of Informativeness on Brand Trust

The results show that Informativeness (X1) has no significant effect on Brand Trust (Z), with an estimate of 0.016 and P = 0.844. Therefore, H1 is rejected. This finding indicates that providing product and promotion information alone is insufficient to build strong consumer trust in the fast-food context. Consumers in this sector appear to prioritize emotional and experiential factors over purely rational information when forming brand trust. This is consistent with Ohara et al. (2025), who found that digital campaigns often fail when they neglect psychological variables such as trust, and suggests that mere information delivery does not create sufficient psychological security.

Effect of Interactivity on Brand Trust

Interactivity (X2) also shows no significant effect on Brand Trust (Z), with an estimate of -0.050 and P = 0.523. H2 is therefore rejected. Although Richeese Factory provides two-way communication channels on social media, the mere presence of interactive features has not translated into stronger consumer trust. This suggests that generic or administrative interactions are insufficient; the quality and personalization of interactions matter more than their frequency. This is partly consistent with Sohail et al. (2020), who found interactivity significant in brand trust formation, though this study suggests that in the Cirebon fast-food context, other dimensions are more influential mediators.

Effect of Perceived Relevance on Brand Trust

Perceived Relevance (X3) exerts a significant positive effect on Brand Trust (Z), with an estimate of 0.342 (P < 0.001) in the trimmed model. H3 is accepted. Perceived Relevance has the largest direct effect on Brand Trust (standardized coefficient = 0.503), confirming that content tailored to consumers' individual needs, preferences, and lifestyle builds the strongest trust. This finding aligns with Zhu and Chang (2016), Gautam and Sharma (2017), and Hafez (2021), who all established that personally relevant marketing content significantly strengthens brand trust.

Effect of Entertainment on Brand Trust

Entertainment (X4) has a significant positive effect on Brand Trust (Z), with an estimate of 0.321 (P < 0.001) in the trimmed model. H4 is accepted. The direct effect of Entertainment on Brand Trust (standardized = 0.366) confirms that content designed to be enjoyable and engaging creates positive emotional bonds with the brand. This is consistent with Mustafi and Hosain (2020), Sohail et al. (2020), and Hafez (2021), reinforcing that entertainment is an effective trust-building mechanism in digital marketing environments.

Effect of Brand Trust on Purchase Decision

Brand Trust (Z) has a strong positive effect on Purchase Decision (Y), with an estimate of 0.641 (P < 0.001), the largest coefficient in the model (standardized = 0.638). H5 is accepted. This finding confirms that consumer trust in Richeese Factory is the most critical determinant of actual purchase behavior. Consistent with Haque and Ahmad (2021) and Kim and Song (2022), higher brand trust reduces consumers' perceived risk and provides the psychological security needed to commit to a purchase.

Mediation Analysis and Discussion

The decomposition analysis reveals a full mediation pattern: Perceived Relevance and Entertainment influence Purchase Decision entirely through Brand Trust (indirect effects of 0.321 and 0.233, respectively; direct effects = 0.000). This supports the role of Brand Trust as a complete mediator between social media marketing features and purchase decisions in the fast-food sector. From a UTAUT theoretical perspective, the digital stimuli (social media marketing features) do not directly translate into purchasing behavior; rather, they first shape the psychological construct of brand trust, which then drives actual transactions. This adds to the growing literature supporting brand trust as a mediating mechanism between digital marketing activities and consumer behavior (Oliveira et al., 2016; Haque & Ahmad, 2021). Importantly, relevance and entertainment -- rather than informativeness or interactivity -- emerge as the key drivers of trust, suggesting that Richeese Factory consumers in Cirebon respond more strongly to personally resonant and emotionally engaging content than to factual information or generic interaction features.

CONCLUSION

This study investigated the impact of Social Media Marketing Features (informativeness, interactivity, perceived relevance, and entertainment) on consumer purchase decisions, with Brand Trust as a mediating variable, in the context of Richeese Factory consumers in Cirebon City. Based on the analysis using SEM-AMOS, several key conclusions were derived.

Informativeness (X1) was found to have no significant effect on Brand Trust, indicating that the mere provision of product information through social media is insufficient to build consumer trust in the fast food sector. Consumers appear to require more emotionally resonant content beyond factual information to develop confidence in a brand.

Similarly, Interactivity (X2) demonstrated no significant positive effect on Brand Trust. This suggests that general or reactive digital interactions, such as automated responses or administrative replies, do not meaningfully contribute to trust formation unless they involve personalized, value-oriented engagement.

Perceived Relevance (X3) proved to be the most influential predictor of Brand Trust, with a path coefficient of 0.342 ($P < 0.001$). When consumers perceive social media content as personally relevant to their needs, preferences, and lifestyle, their trust in the brand increases substantially. This finding underscores the critical importance of content personalization in digital marketing strategies.

Entertainment (X4) also demonstrated a significant positive influence on Brand Trust with a coefficient of 0.321 ($P < 0.001$). Engaging, enjoyable, and visually appealing content creates positive emotional associations that translate into increased brand confidence. This confirms that creative, entertaining content is a strategic asset for fast food brands operating in a visually competitive digital landscape.

Brand Trust (Z) exhibited the strongest positive effect on Purchase Decision (Y) with a coefficient of 0.641 ($P < 0.001$), making it the dominant driver of consumer buying behavior in this model. This finding validates the central theoretical proposition that trust functions as the decisive psychological bridge between digital marketing stimuli and actual purchasing behavior.

The decomposition of effects confirmed that Brand Trust fully mediates all pathways from Social Media Marketing Features to Purchase Decision. Perceived Relevance and Entertainment influence Purchase Decision exclusively through Brand Trust, with total indirect effects of 0.321 and 0.233 respectively. These findings demonstrate that effective digital marketing in the fast food industry must prioritize trust-building content strategies over purely informational or interactive approaches.

Theoretically, this study extends the UTAUT framework by incorporating Brand Trust as a necessary mediating construct between digital marketing features and actual purchase behavior. Practically, the findings recommend that Richeese Factory's digital marketing team focus on creating highly relevant and entertaining content that resonates with the lifestyle of young urban consumers, rather than merely increasing the volume of informational posts or generic interactions. Future research should consider incorporating additional psychological variables such as brand loyalty, e-WOM, or perceived risk, and employ longitudinal methodologies to examine the evolution of consumer trust over time.

REFERENCES

Al-Emran, M., Arpaci, I., & Salloum, S. A. (2020). An empirical examination of continuous intention to use m-learning: An integrated model. Education and Information Technologies, 25(4), 2899–2918. https://doi.org/10.1007/s10639-019-10094-2

Al-Shareef, F., El-Asrar, S. A., Al-Bakr, L., Al-Amro, M., Alqahtani, F., Aleanizy, F., & Al-Rashood, S. (2016). Investigating the disposal of expired and unused medication in Riyadh, Saudi Arabia: a cross-sectional study. International Journal of Clinical Pharmacy, 38, 822–828.

Alalwan, A. A. (2018). Investigating the impact of social media advertising features on customer purchase intention. International Journal of Information Management, 42, 65–77.

Azizpuddin, F. N. A. M., & Shahrom, M. (2024). The Influence of Social Media Marketing Features on Consumers' Purchasing Decisions of Tourism Products. Information Management and Business Review, 4(1), 9–15.

Cheung, G. P. (2020). The Influence of Perceived Social Media Marketing Elements On Customer Brand Engagement And Brand Knowledge. Asia Pacific Journal of Marketing and Logistics Ahead of Print.

Gupta, S. (2024). The Nexus of Brand Trust, Social Media Marketing Features, and Online Fast-Food Purchase Intentions: An Empirical Inquiry. International Journal For Multidisciplinary Research, 6(6), 1–21. https://doi.org/10.36948/ijfmr.2024.v06i06.34508

Hanaysha, J. R. (2022). Impact of social media marketing features on consumer's purchase decision in the fast-food industry: Brand trust as a mediator. International Journal of Information Management Data Insights, 2(2), 100102. https://doi.org/10.1016/j.jjimei.2022.100102

Haque, A., & Ahmad, S. (2021). Mediating role of brand trust between digital marketing and purchase decision: Evidence from online food delivery services. Journal of Internet Commerce, 20(3), 272–290.

Isbahi, M. B., Zuana, M. M. M. ., & Mariana, E. R. . (2022). The Technology Strategy in Website Communication Media in Improving Business Activities. *Majapahit Journal of Islamic Finance and Management*, *1*(2), 126–138. https://doi.org/10.31538/mjifm.v1i2.17

Jadil, Y., Rana, N. P., & Dwivedi, Y. K. (2022). Understanding the drivers of online trust and intention to buy on a website: An emerging market perspective. International Journal of Information Management Data Insights, 2(1), 100065. https://doi.org/10.1016/j.jjimei.2022.100065

Keegan, L., Suhud, U., & Sadat, A. M. (2023). Customer Purchase Intention in a Local Fast Food Restaurant: Testing the Role of Social Media Marketing Activities. Journal of Social Research, 2(7), 2348–2361. https://doi.org/10.55324/josr.v2i7.1180

Kotler, P., & Keller, K. L. (2021). Marketing Management. New Jersey: Pearson.

Kusnendi. (2006). Analisis Jalur. Universitas Pendidikan Indonesia Press.

Ningrum, A. P., Hidayat, M. S., & Kasnowo. (2025). Analisis Faktor-Faktor Media Sosial Yang Mempengaruhi Keputusan Pembelian di Tuminis Catering Gresik. Business and Management Journal, 03(1), 81–90.

Ohara, M. R., Albeta, F. R., Karneli, O., Aprilla, V. R., & Firmansyah, F. (2025). Psikologi Konsumen dalam Era Digital: Analisis Literatur tentang Peran Emosi dalam Digital Advertising dan Brand Attachment. Jurnal Minfo Polgan, 14(1), 18–27. https://doi.org/10.33395/jmp.v14i1.14564

Oliveira, T., Thomas, M., Baptista, G., & Campos, F. (2016). Mobile payment: Understanding the determinants of customer adoption and intention to recommend the technology. Computers in Human Behavior, 61(8), 404–414. https://doi.org/10.1016/j.chb.2016.03.030

Pamungkas, D. S., Saputra, I. B., & Laksana, A. (2024). Strategi Komunikasi Digital Melalui Media Sosial Untuk Membangun Kepercayaan Konsumen. Konsensus: Jurnal Ilmu Pertahanan, Hukum Dan Ilmu Komunikasi, 1(6), 88–94.

Sharma, A., Patro, S., & Chaudhry, H. (2022). Brand identity and culture interaction in the Indian context: a grounded approach. Journal of Advances in Management Research, 19(1), 31–54.

Smink, A. R., Frowijn, S., van Reijmersdal, E. A., van Noort, G., & Neijens, P. C. (2019). Try online before you buy: How does shopping with augmented reality affect brand responses and personal data disclosure. Electronic Commerce Research and Applications, 35(1), 100854. https://doi.org/10.1016/j.elerap.2019.100854

Sugiyono. (2019). Metode Penelitian Kuantitatif Kualitatif Dan R&D. Alfabeta.

Venkatesh, V., Morris, M. G., Davis, G. B., & Davis, F. D. (2003). User Acceptance of Information Technology: Toward a Unified View. MIS Quarterly: Management Information Systems, 27(3), 425–478.

Venkatesh, V., Thong, J. Y. L., & Xu, X. (2022). Unified theory of acceptance and use of technology: A synthesis and the road ahead. Information Systems Journal, 32(3), 527–562.

We Are Social & Hootsuite. (2024). Digital 2024: Global digital overview.

Wottrich, V. M., Verlegh, P. W., & Smit, E. G. (2017). The role of customization, brand trust, and privacy concerns in advergaming. International Journal of Advertising, 36(1), 60–81. https://doi.org/10.1080/02650487.2016.1186951