IMPROVING EMPLOYEE JOB SATISFACTION AT PT SBCR CIREBON, WEST JAVA, BY ENCOURAGING ORGANIZATIONAL CITIZENSHIP BEHAVIOR AND A CONDUCIVE WORK ENVIRONMENT

Wulan Ayuningtias[1]
Universitas Swadaya Gunung Jati, Cirebon, Indonesia
wulan.122020213@ugj.ac.id

Noveria Susijawati[2]
Universitas Swadaya Gunung Jati, Cirebon, Indonesia
noveriasusijawati@ugj.ac.id

Abstract

This research examines how work environment and organisational citizenship behaviour affect job satisfaction at PT SBCR Cirebon, West Java. Successful human resource management, especially in industrial organisations that need cooperation, accuracy, and consistent employee performance, depends on job happiness. This quantitative study uses an associative design. A purposive sample method was used to distribute questionnaires to 115 workers. Validity and reliability tests were performed on the study instrument, and SPSS software was used for multiple linear regression data analysis. Results reveal that work environment positively and significantly affects employee job satisfaction. Organisational citizenship behaviour also boosts work satisfaction significantly. Work atmosphere and organisational citizenship behaviour also boost job satisfaction. These results show that a pleasant, safe, and favourable workplace and workers' voluntary behaviours that help the business may boost job satisfaction. This research is anticipated to inform PT SBCR's human resource management strategies, notably in enhancing the work environment and fostering good work behaviours to promote sustained job satisfaction.

Keywords: Work Environment; Organizational Citizenship Behavior; Employee Job Satisfaction; Human Resource Management

INTRODUCTION

Companies succeed based on their human resources, particularly in manufacturing, which depends significantly on employee performance. Human resource management performance is measured by employee job satisfaction, a good emotional state that results from work and workplace evaluations and affects corporate objectives.

According to Septiana Elma Sinta et al. (2024), job satisfaction is a favourable attitude toward work based on work appraisal. Job satisfaction is a positive emotional state experienced at work that comes from job fulfilment or success. Work environment and Organisational Citizenship Behaviour affect employee job satisfaction. At work, people operate differently, which boosts productivity and job satisfaction, according to Firdaus et al. (2024). A secure, pleasant workplace boosts productivity and employee happiness.

Widodo & Sulistiasih (2023) define organisational citizenship behaviour as voluntary employee behaviour outside official duties that promotes organisational objectives. Organisational Citizenship Behaviour is voluntary behaviours beyond official obligations that show workers' loyalty, collaboration, and connection to the company, promoting work effectiveness and harmony.

The high expectations for accuracy, collaboration, and constant quality in the production process make the work environment and Organisational Citizenship Behaviour vital at PT Siraj Badawi Cukup Rupiah (SBCR) Cirebon, West Java, a food and beverage manufacturing firm. Workplace inconsistencies and Organisational Citizenship behaviours may lower employee happiness and productivity.

Thus, this study examined how work environment and organisational citizenship behaviour affect employee job satisfaction at PT SBCR Cirebon, West Java. This research should give an overview of the company's human resource situation and help management create more effective and sustainable HR policies.

REVIEW OF LITERATURE

Independent factors affect work satisfaction (Y) in this research. The Two-Factor Theory by Frederick Herzberg maintains that work satisfaction and discontent are distinct circumstances. Job satisfaction and discontent have different causes. Herzberg divides work satisfaction variables into motivational and hygienic aspects. Achievement, recognition, effort, responsibility, and progress and promotion all boost workplace happiness. If handled well, hygiene variables such business policy and administration, supervision, colleague relationships, working environment, income and perks, and job security minimise job unhappiness Andriani & Widiawati., (2017).

According to Handoko in Lusiana et al. (2024), job satisfaction is the sensation of pleasure or dislike workers have toward their occupations, which is represented in a good work and work environment attitude. Job satisfaction is a favourable attitude that results from a job that satisfies expectations, gives comfort, and makes you happy at work. This theoretical basis increases this study's conceptual framework in analysing how work environment and Organisational Citizenship Behaviour affect job satisfaction at PT SBCR Cirebon, West Java.

Workplace conditions impact workers' productivity and comfort. Sunyoto's hypothesis states that the workplace's smoothness, efficacy, and comfort help workers do

their everyday tasks. Firdaus et al. (2024) claim that the work environment is where workers operate differently, which influences productivity and job satisfaction.

The work environment includes employee interactions, noise, work laws, lighting, air circulation, and safety. These dimensions affect physical and non-physical working circumstances. Work environment includes all non-financial circumstances workers face and is where they do their jobs Ansari & Khan., (2024).

Agung Aditya Saputra (2022) found that work environment enhancements boost employee job satisfaction. This study shows that management's focus on work environment conditions improves job satisfaction and sustains employee performance. Ketut et al. (2022) agree that the work environment including employment conditions, atmosphere, and spaces to interact can impact job satisfaction since it affects all workers. Also, Nena et al. (2022) found that work environment positively and significantly affects job satisfaction. Better work environments boost job happiness.

Organ in Pangastuti (2018) defines organisational citizenship behaviour as altruism, conscientiousness, sportsmanship, civility, and civic virtue. These five categories cover employee behaviours including helping colleagues, exceeding expectations, staying optimistic in challenging times, building strong working connections, and engaging in organisational life.

According to Neessen et al. (2021), Organisational Citizenship Behaviour is voluntary employee behaviour that improves organisational performance and environment without being mandated or rewarded. Organisational Citizenship Behaviour is voluntary extra-role behaviour conducted by workers outside their official job duties that supports organisational performance and creates a more effective and peaceful work environment.

Organizational Citizenship Behaviour improves employee work satisfaction, according to several research. Muthia et al. (2023) found that workers are more satisfied with their jobs when leaders display Organisational Citizenship Behaviour. This suggests that volunteer behaviour, caring, and assistance at work might make workers feel appreciated and comfortable. Putri & Supriadi (2022) found that Organisational Citizenship Behaviour positively and significantly affects employee work satisfaction

RESEARCH METHOD

This quantitative associative research study examines varied links and effects. To guarantee each statement item properly and consistently assesses variables, the study instrument was validated and reliable. This research used SPSS software to analyse data using multiple linear regression to evaluate how independent factors affect the dependent variable. A purposive sample method was used to deliver questionnaires to 115 workers. Research instrument validity and reliability were verified, and multiple linear regression was used to analyse data.

Research Hypothesis

This research examines how work environment and organisational citizenship behaviour affect job satisfaction at PT SBCR Cirebon, West Java. Based on literature evaluation and prior research, this study proposes the following hypothesis :

- H1 : The better the work environment, the higher an employee’s job satisfaction.

- H2 : The higher the organizational citizenship behavior, the higher an employee's job satisfaction.

Research Model

This study model shows how work environment (X1) and organisational citizenship behaviour (X2) affect employee job satisfaction (Y).

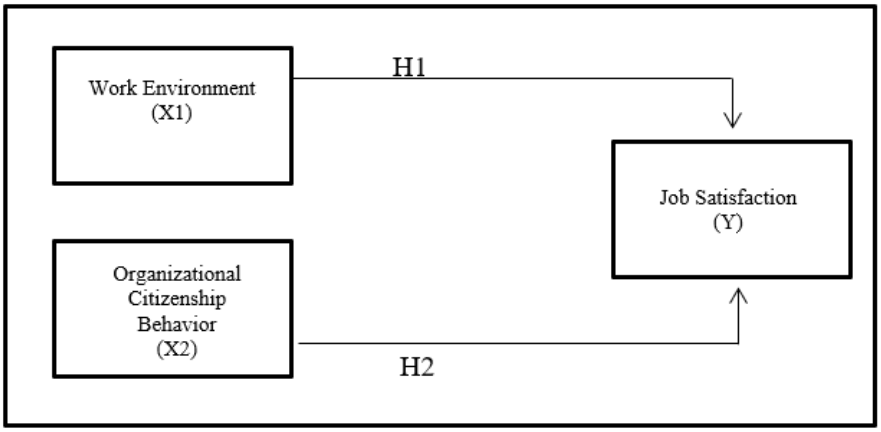

Figure 1.
Research Framework

The image of the model of this study shows that the work environment and OCB have a direct relationship with employee job satisfaction.

RESULTS AND DISCUSSION

Descriptive Analysis

Table 1.
Characteristics of Research Respondents

Gender :		
Male	105	91,3%
Female	10	8,7%
Age :		
20 – 30 years	23	20%
31 – 40 years	48	41,7%
>40 years	44	38,3%
Length of employment: :		
1 – 10 years	79	68,7%
11 – 20 years	24	20,9%
>20 years	12	10,4%

Source: Data processed research (2026)

The table shows that 105 (91.3%) responders are male. Female responders number 10. (8.7%). Age groups include 23 (20%), 48 (41.7%), and 44 (38.3%): 20–30, 31–40, and above 40. Based on job duration, most respondents in this study have worked for 1–10 years, with this group dominating at 79 people (68.7%) of all respondents. Respondents

with 11–20 years of service are 24 people (20.9%), while those who have worked for more than 20 years total 12 people (10.4%).

Data Analysis Results

Validity Test

Before analysing the data, the research instrument was validated for practicality. Each statement item must appropriately describe the variable being assessed in this exam (Ghozali, 2021).

Table 2.
Results of the Instrument Validity Test

Statement	Work Environment	Calculated r-value Organizational Citizenship Behavior	Job Satisfaction	r table	Remarks
1	0,499	0,701	0,566	0,183	Valid
2	0,530	0,616	0,707	0,183	Valid
3	0,617	0,520	0,721	0,183	Valid
4	0,458	0,535	0,649	0,183	Valid
5	0,580	0,473	0,694	0,183	Valid
6	0,582	0,493	0,759	0,183	Valid
7	0,268	0,550	0,730	0,183	Valid
8	0,184	0,464	0,649	0,183	Valid
9	0,668	0,670		0,183	Valid
10	0,652	0,544		0,183	Valid
11	0,602	0,327		0,183	Valid
12	0,538	0,533		0,183	Valid
13	0,543	0,462		0,183	Valid
14	0,540	0,425		0,183	Valid
15	0,247	0,491		0,183	Valid
16	0,203	0,499		0,183	Valid
17	0,486	0,643		0,183	Valid
18	0,574	0,497		0,183	Valid
19	0,448	0,494		0,183	Valid
20	0,590	0,737		0,183	Valid
21	0,485			0,183	Valid
22	0,616			0,183	Valid
23	0,616			0,183	Valid
24	0,633			0,183	Valid

Source: Data processed research (2026)

The validity test in this study was conducted using Pearson Product Moment correlation between the item score and the total variable score. The testing criterion is that if the calculated r value > r table (0.183), then the item is considered valid.

Reliability Test

Table 3.
Results of the Instrument Reliability Test

Variable	Cronbach's Alpha	R Table	Reliability
Work Environment	0,867	0,70	Reliable
Organizational Citizenship Behavior	0,857	0,70	Reliable
Job Satisfaction	0,850	0,70	Reliable

Source: Data processed research (2026)

The reliability test showed that X1, the Work Environment variable, has a Cronbach's Alpha of 0.867. Organisational Citizenship Behaviour (X2) has 0.857 Cronbach's Alpha. The Employee Job Satisfaction variable (Y) has 0.850 Cronbach's Alpha. The Cronbach's Alpha scores for all variables meet testing standards for dependability. The study tools for Work Environment (X1), Organisational Citizenship Behaviour (X2), and Employee Job Satisfaction (Y) are dependable and acceptable for data analysis.

Classical Assumption Test

Multicollinearity Test

This research examined independent variable multicollinearity using the multicollinearity test. Multicollinearity is assumed to be absent if the Tolerance value is more than 0.10 and the Variance Inflation Factor (VIF) is less than 10.0.

Table 4.
Results of the Multicollinearity Test

Coefficients[a]		
Variable		
	Tolerance	**VIF**
Work Environment	0,646	1,547
Organizational Citizenship Behavior	0,646	1,547

Source: Data processed research (2026)

The table shows that each variable has tolerance levels over 0.10 and VIF values below 10. Thus, this study's variables are not multicollinear. The independent variables are not strongly correlated. The multiple regression model in this research is eligible for further examination.

Normality Test

The normality test checks data distribution. This study employs SPSS's Kolmogorov-Smirnov normality test. If significance reaches 0.05, residuals are normally distributed. The statistics reveal 0.159 > 0.05 Asymp. Sig. (2-tailed). The analysed data are normally distributed.

Hypothesis Test

Multiple Linear Regression Analysis

Regression analysis examines how independent factors affect dependent variables. The multiple linear regression equation may determine impact direction, magnitude, and variable connections. Table 5 shows the calculated multiple linear regression results :

Table 5.
Results of the Multiple Linear Regression Test

Model		Unstandardized Coefficients		Standardized Coefficients		
		B	Std Error	Beta	t	Sig.
1	(constant)	-4,896	2,637		-1,857	,066
	Work Environment (X_1)	,205	,030	,482	6,868	,000
	Organizational Citizenship Behavior (X_2)	,220	,037	,416	5,938	,000
Adjusted R Square = 0,644						
F Statistic = 101.254 and sig < 0.05						

Source: Data processed research (2026)

According to the coefficient of determination (R^2) of 0.644, 64.4% of employee job satisfaction is impacted by work environment and Organizational Citizenship Behaviour, whereas 35.6% refers to factors outside the model. The F value (101.254) and significance (< 0.005) indicate that the regression model well explains employee job satisfaction variance in this research. Table 5 yields the multiple regression equation Y = -4.896 + 0.205 X1 + 0.220 X2. The first hypothesis test shows a t value of 6.868 and a significance value of 0.000, showing that work environment positively affects employee job satisfaction. The work environment positively affects employee job satisfaction by 0.205. Thus, the idea that a better work environment increases employee job satisfaction is recognised.

This study confirms earlier studies showing the work environment positively affects job satisfaction. Agung Aditya Saputra (2022) found that workplace enhancements boost job satisfaction. According to Ketut et al. (2022), the work environment covers all aspects of the workplace, including circumstances, atmosphere, and locations for contact, which may impact all work done there. These findings support earlier research indicating the work environment affects employee job satisfaction across organizational settings. Therefore, organizations must prioritise work environment management to sustainably boost worker satisfaction.

Besides the workplace, organizational citizenship behaviour improves employee job happiness. This suggests that optional actions outside official obligations might boost job satisfaction. Organizational Citizenship Behaviour indicates a strong emotional link between workers and the company, therefore employees with high levels of it feel more comfortable, proud, and engaged at work. The second hypothesis test shows that Organizational Citizenship Behaviour positively and significantly affects employee job satisfaction with a t value of 5.938 and a significance value of 0.000. Organizational Citizenship Behaviour affects employee job satisfaction by 0.220, which is more than the work environment and good. Thus, the concept that Organizational Citizenship Behaviour increases work happiness is accepted.

Previous studies show that workers with high Organizational Citizenship Behaviour have higher job satisfaction. Organizational Citizenship Behaviour may promote a helpful, fair, and cooperative work environment, making workers happier and more dedicated to the company, according to Stephen P. Robbins (2017). The consistency of this study's findings with current ideas and past research suggests that Organizational Citizenship Behaviour may improve work relationships and employee job satisfaction. Overall, this research suggests that work environment elements and good employee behaviours including Organizational Citizenship Behaviour, boost employee job satisfaction.

CONCLUSION

This research examines how work environment and Organisational Citizenship Behaviour affect job satisfaction at PT SBCR Cirebon, West Java. According to studies, a good work environment and strong Organisational Citizenship Behaviour boost employee job satisfaction. Organisational Citizenship Behaviour promotes harmonious, helpful, and caring work relationships, while a pleasant, safe, and supportive workplace that facilitates good interactions may make workers feel appreciated. Both of these aspects contribute to a great workplace, making workers happier, more engaged, and more loyal.

Based on these findings, company management should continue to improve the physical and non-physical work environment and promote Organisational Citizenship Behaviour through a positive organisational culture, supportive leadership, and a fair reward system. Future researchers could consider leadership, salary, and work motivation as factors that may affect job satisfaction and utilise other study methodologies or a larger sample size to get more thorough findings. Future research might also use a qualitative technique to examine workers' job satisfaction and organisational citizenship behaviour.

REFERENCES

Agung Aditya Saputra. (2022). Pengaruh Kompensasi , Lingkungan Kerja Dan Beban Kerja Terhadap Kepuasan Kerja Karyawan. *Technomedia Journal (TMJ)*, *7*(1), 2–12. https://core.ac.uk/download/pdf/483372413.pdf

Andriani, M., & Widiawati, K. (2017). *Penerapan Motivasi Karyawan Menurut Teori Dua Faktor Frederick Herzberg Pada PT Aristika Kreasi Mandiri*. *5*(1), 83–98.

Ansari, H. U. H., & Khan, S. N. (2024). Linking green transformational leadership and employee pro-environmental behavior: The role of intention and work environment. *Sustainable Futures*, *8*(October), 100336. https://doi.org/10.1016/j.sftr.2024.100336

Firdaus, N. A., Kusuma, K. A., Maya, H., & Sari, K. (2024). *Satisfaction of PT . X Employees Pengaruh Lingkungan Kerja , Pengalaman Kerja Dan Kompensasi Terhadap Kepuasan*. *5*(2), 4294–4303.

Ghozali, I. (2021). *Aplikasi Analisis Multivariate dengan Program IBM SPSS 26* (10th ed.). Badan Penerbit Universitas Diponegoro.

Isbahi, M. B., Zuana, M. M. M. ., & Mariana, E. R. . (2022). The Technology Strategy in Website Communication Media in Improving Business Activities. *Majapahit Journal of Islamic Finance and Management*, *1*(2), 126–138. https://doi.org/10.31538/mjifm.v1i2.17

Ketut, N., Krismawati, A., & Manuaba, I. B. S. (2022). Kontribusi Lingkungan Kerja dan

Motivasi Kerja terhadap Kepuasan Kerja Guru. *INDONESIAN JOURNAL OF INSTRUCTION*, *3*, 92–104.

Lusiana, H., Khuzaini, K., & Mursanto, M. (2024). Pengaruh Gaya Kepemimpinan Dan Budaya Organisasi Terhadap Kinerja Karyawan Dengan Kepuasan Kerja Sebagai Variabel Intervening Pada Koperasi Tirta Lestari. *Jurnal Riset Inspirasi Manajemen Dan Kewirausahaan*, *8*(2), 79–91. https://doi.org/10.35130/jrimk.v8i2.577

Muthia, R., Amang, B., & Zakaria, J. (2023). *Pengaruh Motivasi , Lingkungan Kerja , Organizational Citizenship Behaviour terhadap Kepuasan Kerja Karyawan Pt . Pentel Siporio di Makassar*. *05*(03), 9077–9093.

Neessen, P. C. M., de Jong, J. P., Caniëls, M. C. J., & Vos, B. (2021). Circular purchasing in Dutch and Belgian organizations: The role of intrapreneurship and organizational citizenship behavior towards the environment. *Journal of Cleaner Production*, *280*. https://doi.org/10.1016/j.jclepro.2020.124978

Nena, M., Dalena, R., Ali, S., Ekonomi, F., Bisnis, D., Pembangunan, U., & Veteran, N. (2022). *Pengaruh Lingkungan Kerja dan Beban Kerja terhadap Kepuasan Kerja Karyawan Wisma Sehati BSD Tangerang Selatan (Effect of Work Environment and Work Load on Work Satisfaction Employees of Wisma Sehati BSD South Tangerang)*. *2*(3), 115–136.

Pangastuti, R. L. (2018). PENGARUH DIMENSI KEPRIBADIAN THE BIG FIVE PERSONALITY TERHADAP ORGANIZATIONAL CITIZENSHIP BEHAVIOR (OCB). *Ekonika*, *3*(1), 87–103.

Putri, F. R., & Supriadi, Y. N. (2022). Pengaruh Kompensasi, Lingkungan Kerja, dan Organizational Citizenship Behavior (OCB) Terhadap Kepuasan Kerja Karyawan PT Patra Badak Arun Solusi. *Jurnal Manajemen Motivasi*, *18*(1), 10. https://doi.org/10.29406/jmm.v18i1.3707

Septiana Elma Sinta, Iswati Iswati, Siti Aisyah, & Anis Fitriyasari. (2024). Pengaruh Kepuasan Kerja dan Disiplin Kerja terhadap Kinerja Karyawan PT Nusatrans Anugerah Makmur. *Jurnal Riset Manajemen*, *2*(3), 530–548. https://doi.org/10.54066/jurma.v2i3.2333

Stephen P. Robbins, T. A. J. (2017). *Organizational Behavior* (17th ed.). Pearson.

Widodo, W., & Sulistiasih, S. (2023). Improving teachers' organizational citizenship behavior based on emotional intelligence and psychological capital. *Jurnal Pendidikan Progresif*, *13*(1), 53–63. https://doi.org/10.23960/jpp.v13.i1.202305